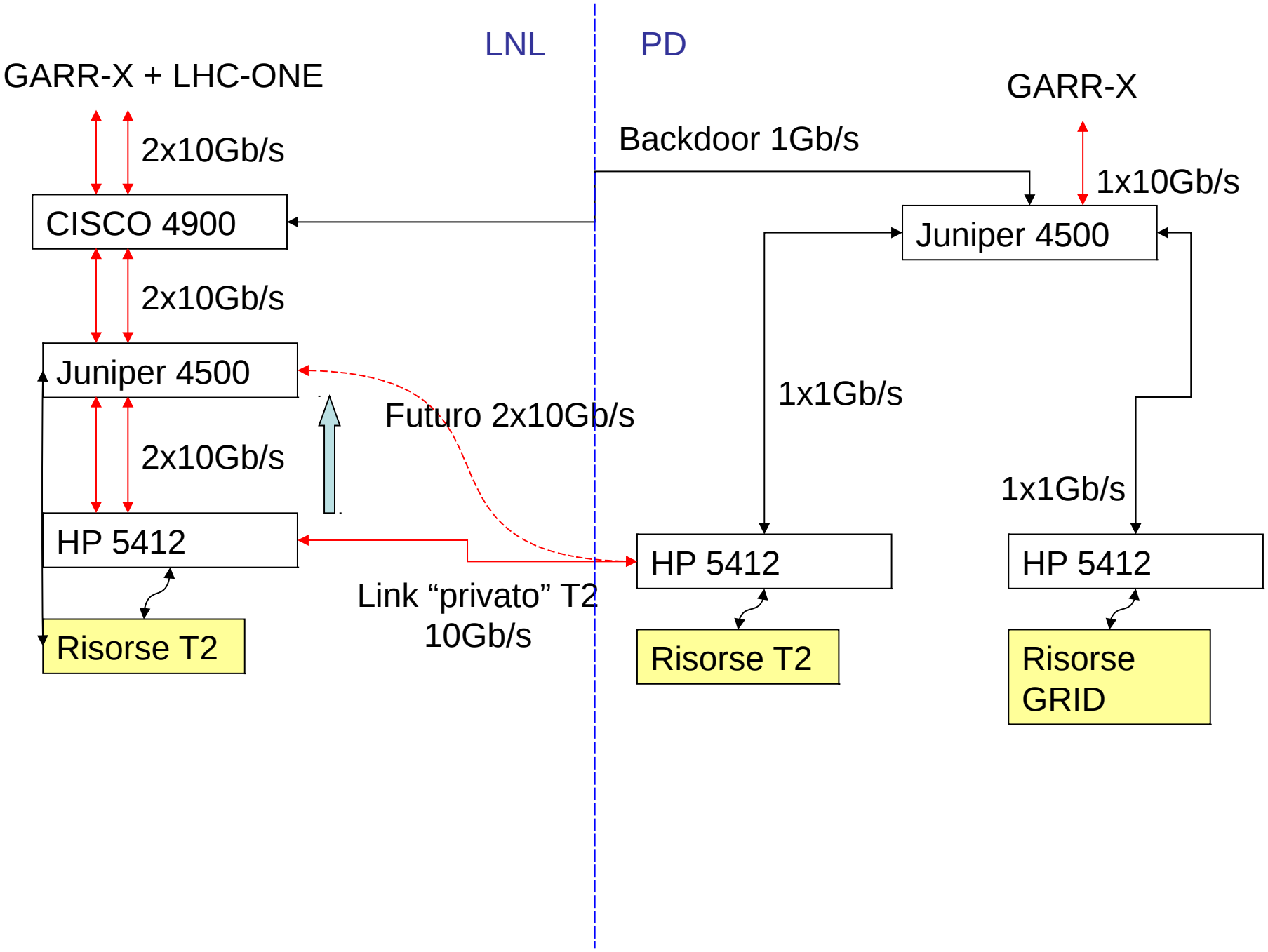
LNL
PD
GARR-X + LHC-ONE
GARR-X
2x10Gb/s
Backdoor 1Gb/s
1x10Gb/s
CISCO 4900
Juniper 4500
2x10Gb/s
Juniper 4500
1x1Gb/s
Futuro 2x10Gb/s
2x10Gb/s
1x1Gb/s
HP 5412
HP 5412
HP 5412
Link "privato" T2
10Gb/s
Risorse T2
Risorse T2
Risorse
GRID